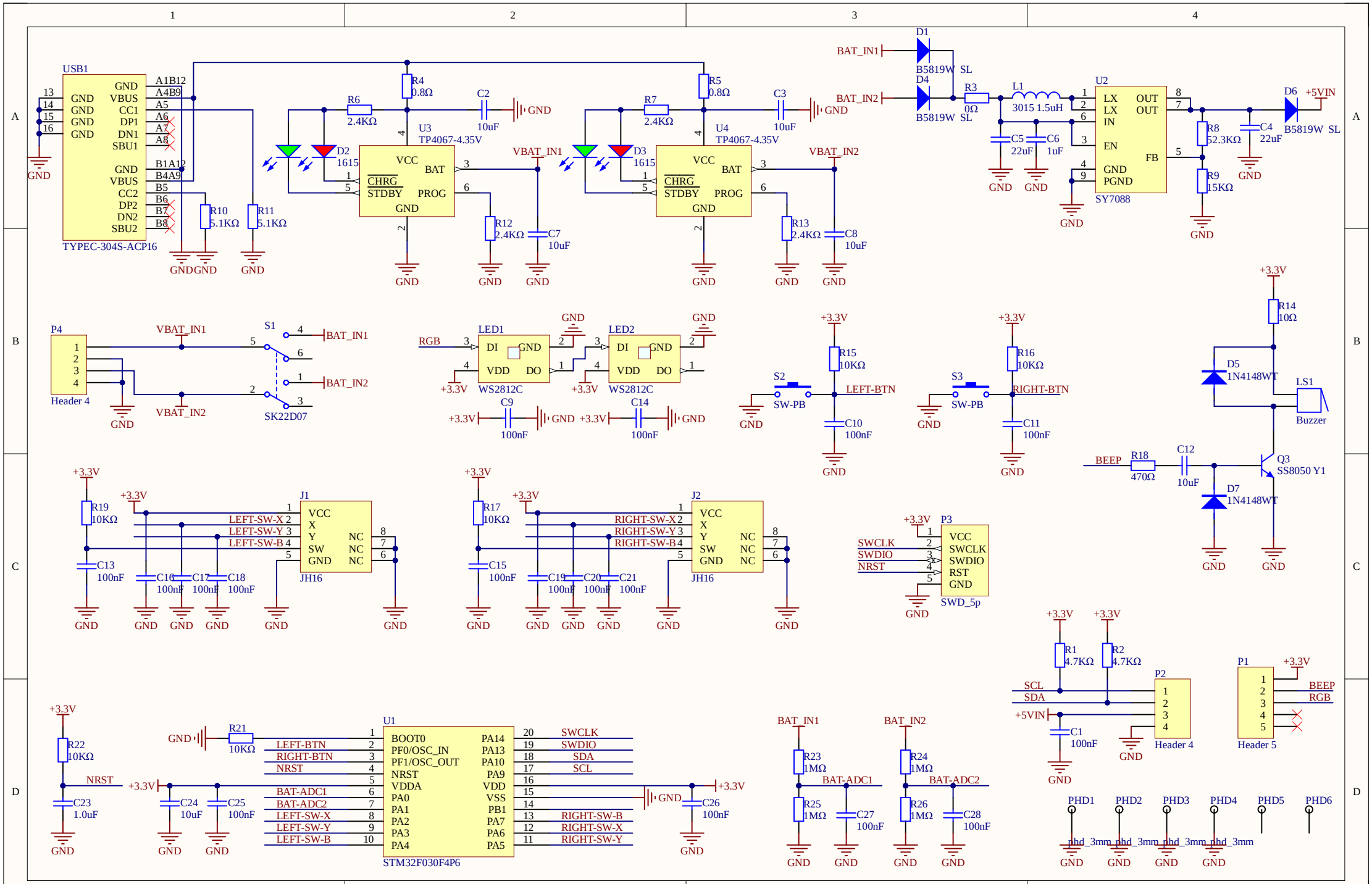
USB1
TYPEC-304S-ACP16
GND
VBUS
CC1
DP1
DN1
SBU1
CC2
DP2
DN2
SBU2
A1B12
A4B9
A5
A6
A7
A8
B1A12
B4A9
B5
B6
B7
B8
R10 5.1KΩ
R11 5.1KΩ
R4 0.8Ω
R5 0.8Ω
R6 2.4KΩ
R7 2.4KΩ
C2 10uF
C3 10uF
U3 TP4067-4.35V
U4 TP4067-4.35V
D2 1615
D3 1615
VCC
BAT
CHRG
STDBY
PROG
VBAT_IN1
VBAT_IN2
R12 2.4KΩ
R13 2.4KΩ
C7 10uF
C8 10uF
D1 B5819W SL
D4 B5819W SL
BAT_IN1
BAT_IN2
R3 0Ω
L1 3015 1.5uH
U2 SY7088
LX
IN
EN
FB
PGND
OUT
C5 22uF
C6 1uF
R8 52.3KΩ
R9 15KΩ
C4 22uF
D6 B5819W SL
+5VIN
P4 Header 4
S1 SK22D07
LED1 WS2812C
LED2 WS2812C
RGB
DI
DO
VDD
C9 100nF
C14 100nF
+3.3V
R15 10KΩ
R16 10KΩ
S2 SW-PB
S3 SW-PB
LEFT-BTN
RIGHT-BTN
C10 100nF
C11 100nF
R14 10Ω
D5 1N4148WT
LS1 Buzzer
BEEP
R18 470Ω
C12 10uF
Q3 SS8050 Y1
D7 1N4148WT
R19 10KΩ
J1 JH16
LEFT-SW-X
LEFT-SW-Y
LEFT-SW-B
NC
C13 100nF
C16 100nF
C17 100nF
C18 100nF
R17 10KΩ
J2 JH16
RIGHT-SW-X
RIGHT-SW-Y
RIGHT-SW-B
C15 100nF
C19 100nF
C20 100nF
C21 100nF
P3 SWD_5p
SWCLK
SWDIO
NRST
RST
R1 4.7KΩ
R2 4.7KΩ
SCL
SDA
C1 100nF
P2 Header 4
P1 Header 5
R22 10KΩ
R21 10KΩ
U1 STM32F030F4P6
BOOT0
PF0/OSC_IN
PF1/OSC_OUT
VDDA
PA0
PA1
PA2
PA3
PA4
PA14
PA13
PA10
PA9
VSS
PB1
PA7
PA6
PA5
BAT-ADC1
BAT-ADC2
C23 1.0uF
C24 10uF
C25 100nF
C26 100nF
R23 1MΩ
R24 1MΩ
R25 1MΩ
R26 1MΩ
C27 100nF
C28 100nF
PHD1
PHD2
PHD3
PHD4
PHD5
PHD6
phd_3mm