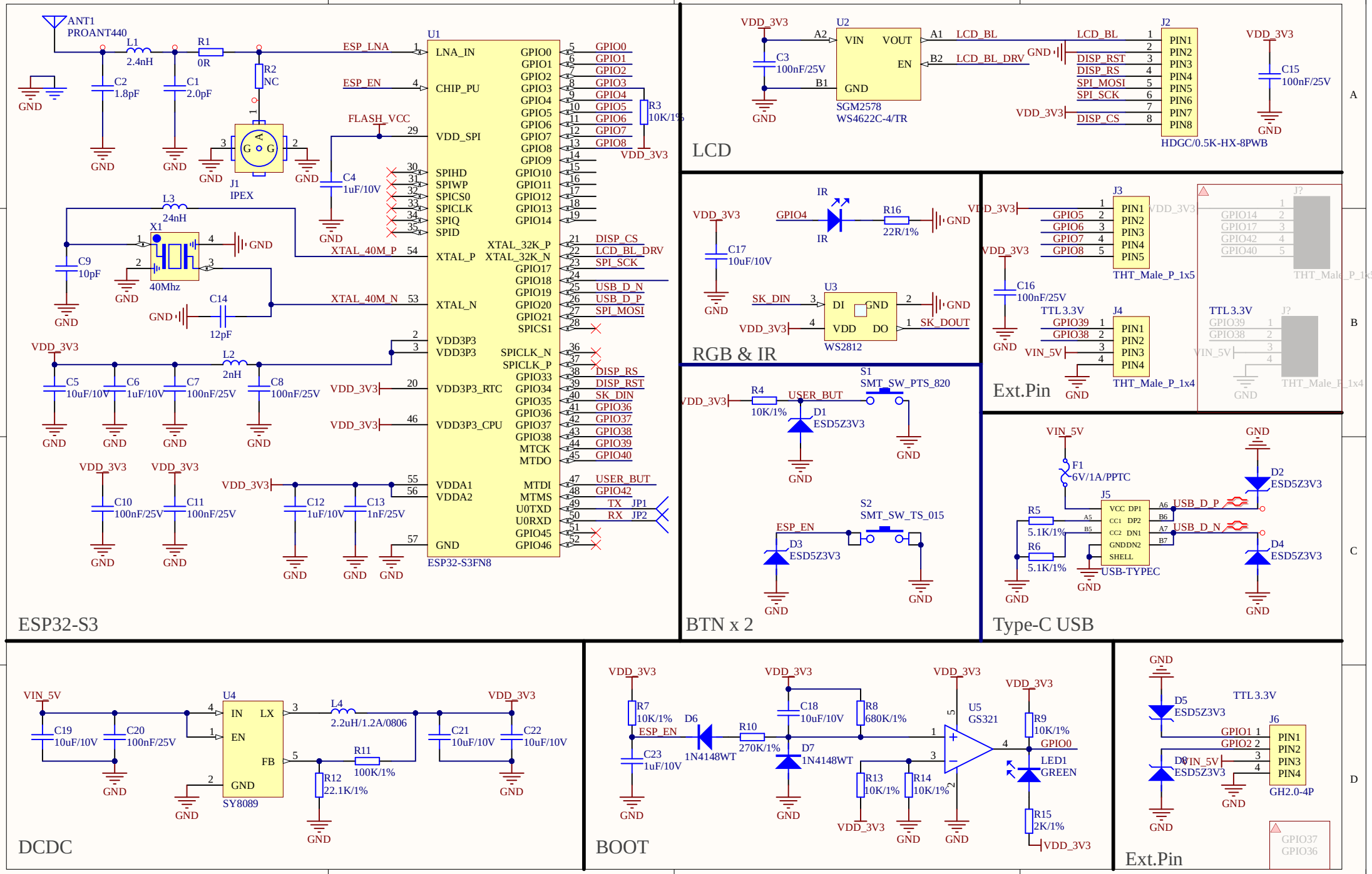
ESP32-S3
ANT1
PROANT440
L1
2.4nH
R1
0R
R2
NC
C2
1.8pF
C1
2.0pF
J1
IPEX
C4
1uF/10V
L3
24nH
X1
40Mhz
C9
10pF
C14
12pF
L2
2nH
C5
10uF/10V
C6
1uF/10V
C7
100nF/25V
C8
100nF/25V
C10
100nF/25V
C11
100nF/25V
C12
1uF/10V
C13
1nF/25V
U1
ESP32-S3FN8
LNA_IN
CHIP_PU
VDD_SPI
SPIHD
SPIWP
SPICS0
SPICLK
SPIQ
SPID
XTAL_40M_P
XTAL_P
XTAL_40M_N
XTAL_N
VDD3P3
VDD3P3_RTC
VDD3P3_CPU
VDDA1
VDDA2
GND
XTAL_32K_P
XTAL_32K_N
SPICLK_N
SPICLK_P
MTCK
MTDO
MTDI
MTMS
U0TXD
U0RXD
ESP_LNA
ESP_EN
FLASH_VCC
R3
10K/1%
DISP_CS
LCD_BL_DRV
SPI_SCK
USB_D_N
USB_D_P
SPI_MOSI
DISP_RS
DISP_RST
SK_DIN
USER_BUT
TX JP1
RX JP2
LCD
U2
SGM2578
WS4622C-4/TR
C3
100nF/25V
C15
100nF/25V
LCD_BL
LCD_BL_DRV
DISP_RST
DISP_RS
SPI_MOSI
SPI_SCK
DISP_CS
J2
HDGC/0.5K-HX-8PWB
RGB & IR
IR
R16
22R/1%
C17
10uF/10V
U3
WS2812
SK_DIN
SK_DOUT
Ext.Pin
J3
THT_Male_P_1x5
J4
THT_Male_P_1x4
TTL 3.3V
VIN_5V
BTN x 2
R4
10K/1%
D1
ESD5Z3V3
S1
SMT_SW_PTS_820
S2
SMT_SW_TS_015
D3
ESD5Z3V3
Type-C USB
F1
6V/1A/PPTC
J5
USB-TYPEC
R5
5.1K/1%
R6
5.1K/1%
D2
ESD5Z3V3
D4
ESD5Z3V3
DCDC
U4
SY8089
IN
LX
EN
FB
GND
L4
2.2uH/1.2A/0806
R11
100K/1%
R12
22.1K/1%
C19
10uF/10V
C20
100nF/25V
C21
10uF/10V
C22
10uF/10V
BOOT
R7
10K/1%
D6
1N4148WT
R10
270K/1%
C23
1uF/10V
C18
10uF/10V
R8
680K/1%
D7
1N4148WT
R13
10K/1%
R14
10K/1%
U5
GS321
R9
10K/1%
LED1
GREEN
R15
2K/1%
Ext.Pin
D5
ESD5Z3V3
D8
ESD5Z3V3
J6
GH2.0-4P
GPIO37
GPIO36