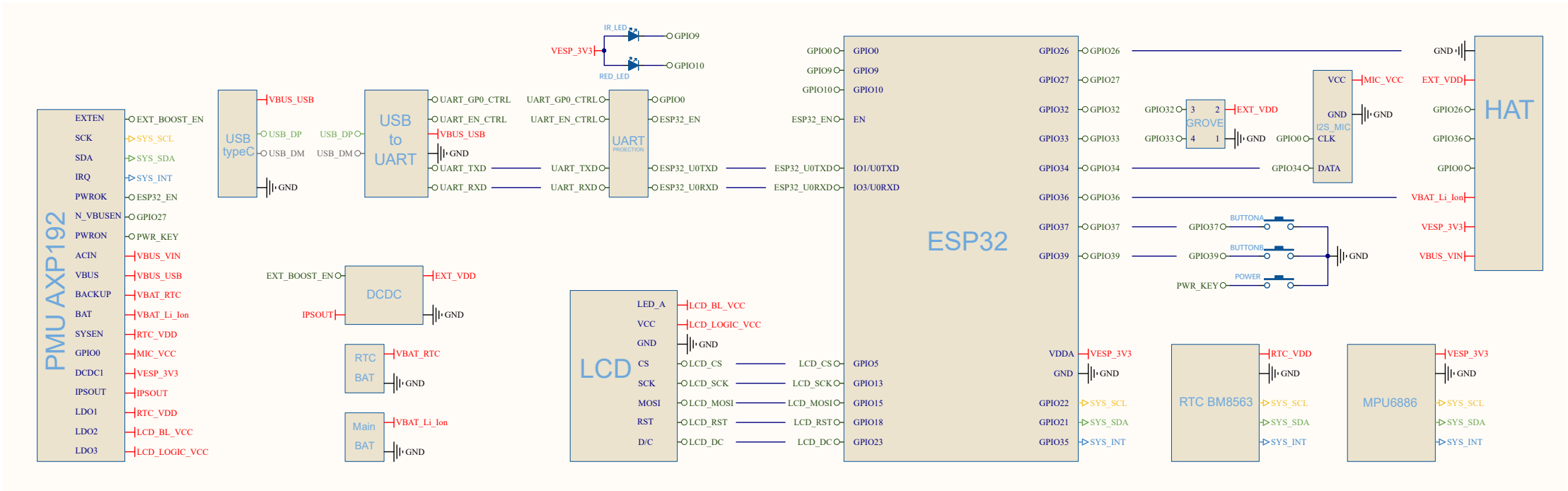
PMU AXP192
EXTEN
SCK
SDA
IRQ
PWROK
N_VBUSEN
PWRON
ACIN
VBUS
BACKUP
BAT
SYSEN
GPIO0
DCDC1
IPSOUT
LDO1
LDO2
LDO3
EXT_BOOST_EN
SYS_SCL
SYS_SDA
SYS_INT
ESP32_EN
GPIO27
PWR_KEY
VBUS_VIN
VBUS_USB
VBAT_RTC
VBAT_Li_Ion
RTC_VDD
MIC_VCC
VESP_3V3
IPSOUT
RTC_VDD
LCD_BL_VCC
LCD_LOGIC_VCC
USB typeC
VBUS_USB
USB_DP
USB_DM
GND
USB to UART
UART_GP0_CTRL
UART_EN_CTRL
VBUS_USB
GND
UART_TXD
UART_RXD
IR_LED
RED_LED
VESP_3V3
GPIO9
GPIO10
UART PROECTION
GPIO0
ESP32_EN
ESP32_U0TXD
ESP32_U0RXD
DCDC
EXT_BOOST_EN
IPSOUT
EXT_VDD
GND
RTC BAT
VBAT_RTC
Main BAT
VBAT_Li_Ion
LCD
LED_A
VCC
GND
CS
SCK
MOSI
RST
D/C
LCD_BL_VCC
LCD_LOGIC_VCC
LCD_CS
LCD_SCK
LCD_MOSI
LCD_RST
LCD_DC
ESP32
GPIO0
GPIO9
GPIO10
EN
IO1/U0TXD
IO3/U0RXD
GPIO5
GPIO13
GPIO15
GPIO18
GPIO23
GPIO26
GPIO27
GPIO32
GPIO33
GPIO34
GPIO36
GPIO37
GPIO39
VDDA
GND
GPIO22
GPIO21
GPIO35
GROVE
EXT_VDD
I2S_MIC
VCC
GND
CLK
DATA
MIC_VCC
BUTTONA
BUTTONB
POWER
HAT
VBAT_Li_Ion
RTC BM8563
MPU6886